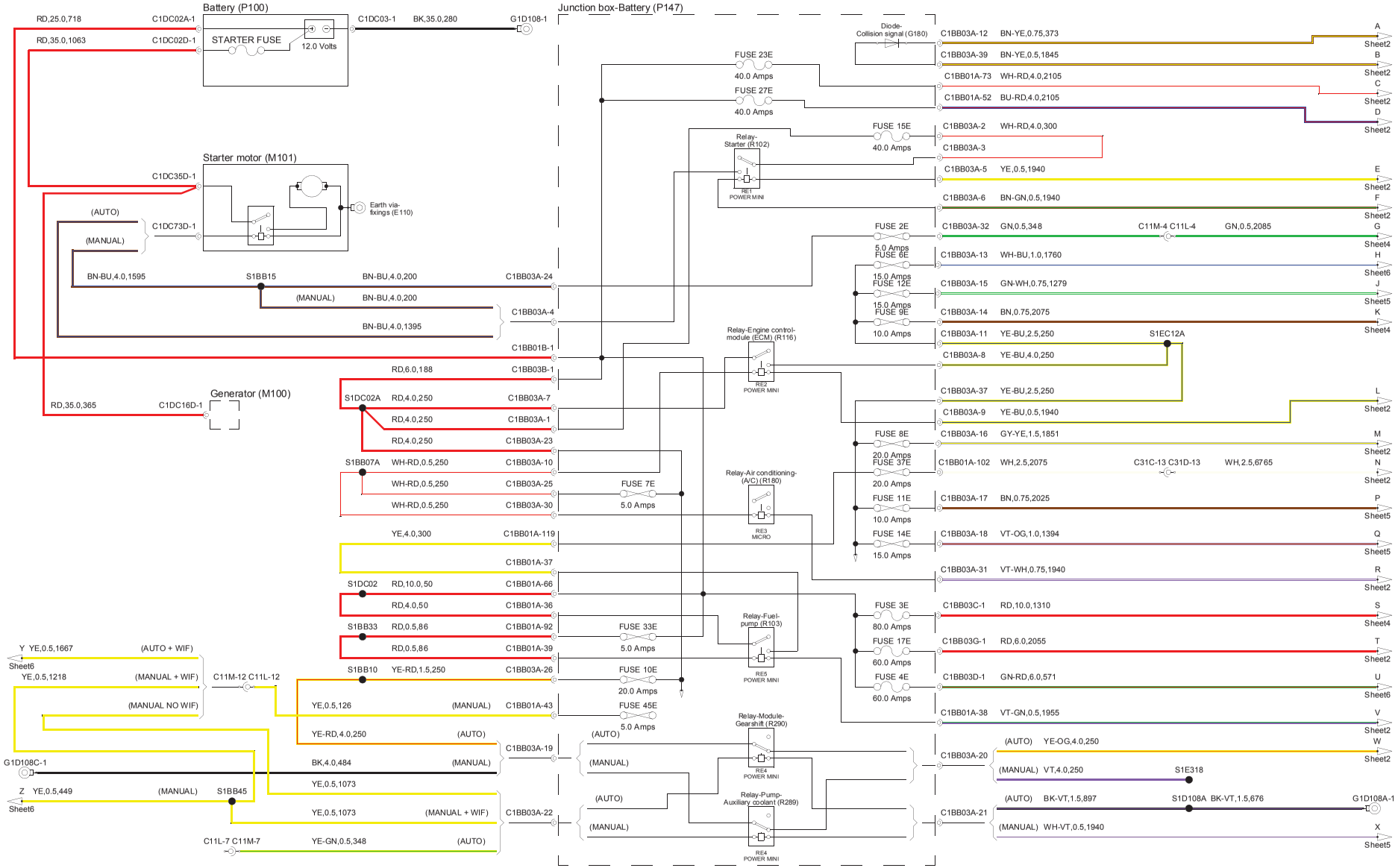
Battery (P100)
STARTER FUSE
12.0 Volts
RD,25.0,718
C1DC02A-1
RD,35.0,1063
C1DC02D-1
C1DC03-1
BK,35.0,280
G1D108-1
Junction box-Battery (P147)
Starter motor (M101)
C1DC35D-1
C1DC73D-1
(AUTO)
(MANUAL)
Earth via-fixings (E110)
BN-BU,4.0,1595
S1BB15
BN-BU,4.0,200
C1BB03A-24
BN-BU,4.0,1395
C1BB03A-4
C1BB01B-1
Generator (M100)
RD,35.0,365
C1DC16D-1
RD,6.0,188
C1BB03B-1
S1DC02A
RD,4.0,250
C1BB03A-7
C1BB03A-1
C1BB03A-23
S1BB07A
WH-RD,0.5,250
C1BB03A-10
C1BB03A-25
C1BB03A-30
YE,4.0,300
C1BB01A-119
C1BB01A-37
S1DC02
RD,10.0,50
C1BB01A-66
RD,4.0,50
C1BB01A-36
S1BB33
RD,0.5,86
C1BB01A-92
C1BB01A-39
S1BB10
YE-RD,1.5,250
C1BB03A-26
YE,0.5,126
C1BB01A-43
YE-RD,4.0,250
C1BB03A-19
BK,4.0,484
YE,0.5,1073
S1BB45
YE,0.5,1073
C1BB03A-22
YE-GN,0.5,348
C11L-7 C11M-7
Y YE,0.5,1667
Sheet6
YE,0.5,1218
(AUTO + WIF)
(MANUAL + WIF)
(MANUAL NO WIF)
C11M-12 C11L-12
G1D108C-1
Z YE,0.5,449
FUSE 23E
40.0 Amps
FUSE 27E
40.0 Amps
Relay-Starter (R102)
RE1 POWER MINI
Relay-Engine control-module (ECM) (R116)
RE2 POWER MINI
FUSE 7E
5.0 Amps
Relay-Air conditioning-(A/C) (R180)
RE3 MICRO
FUSE 33E
5.0 Amps
FUSE 10E
20.0 Amps
FUSE 45E
5.0 Amps
Relay-Fuel-pump (R103)
RE5 POWER MINI
Relay-Module-Gearshift (R290)
RE4 POWER MINI
Relay-Pump-Auxiliary coolant (R289)
RE4 POWER MINI
Diode-Collision signal (G180)
FUSE 15E
40.0 Amps
FUSE 2E
5.0 Amps
FUSE 6E
15.0 Amps
FUSE 12E
15.0 Amps
FUSE 9E
10.0 Amps
FUSE 8E
20.0 Amps
FUSE 37E
20.0 Amps
FUSE 11E
10.0 Amps
FUSE 14E
15.0 Amps
FUSE 3E
80.0 Amps
FUSE 17E
60.0 Amps
FUSE 4E
60.0 Amps
C1BB03A-12 BN-YE,0.75,373
C1BB03A-39 BN-YE,0.5,1845
C1BB01A-73 WH-RD,4.0,2105
C1BB01A-52 BU-RD,4.0,2105
C1BB03A-2 WH-RD,4.0,300
C1BB03A-3
C1BB03A-5 YE,0.5,1940
C1BB03A-6 BN-GN,0.5,1940
C1BB03A-32 GN,0.5,348
C11M-4 C11L-4 GN,0.5,2085
C1BB03A-13 WH-BU,1.0,1760
C1BB03A-15 GN-WH,0.75,1279
C1BB03A-14 BN,0.75,2075
C1BB03A-11 YE-BU,2.5,250
S1EC12A
C1BB03A-8 YE-BU,4.0,250
C1BB03A-37 YE-BU,2.5,250
C1BB03A-9 YE-BU,0.5,1940
C1BB03A-16 GY-YE,1.5,1851
C1BB01A-102 WH,2.5,2075
C31C-13 C31D-13 WH,2.5,6765
C1BB03A-17 BN,0.75,2025
C1BB03A-18 VT-OG,1.0,1394
C1BB03A-31 VT-WH,0.75,1940
C1BB03C-1 RD,10.0,1310
C1BB03G-1 RD,6.0,2055
C1BB03D-1 GN-RD,6.0,571
C1BB01A-38 VT-GN,0.5,1955
C1BB03A-20
(AUTO) YE-OG,4.0,250
(MANUAL) VT,4.0,250
S1E318
C1BB03A-21
(AUTO) BK-VT,1.5,897
S1D108A BK-VT,1.5,676
G1D108A-1
(MANUAL) WH-VT,0.5,1940
A Sheet2
B Sheet2
C Sheet2
D Sheet2
E Sheet2
F Sheet2
G Sheet4
H Sheet6
J Sheet5
K Sheet4
L Sheet2
M Sheet2
N Sheet2
P Sheet5
Q Sheet5
R Sheet2
S Sheet4
T Sheet2
U Sheet6
V Sheet2
W Sheet2
X Sheet5

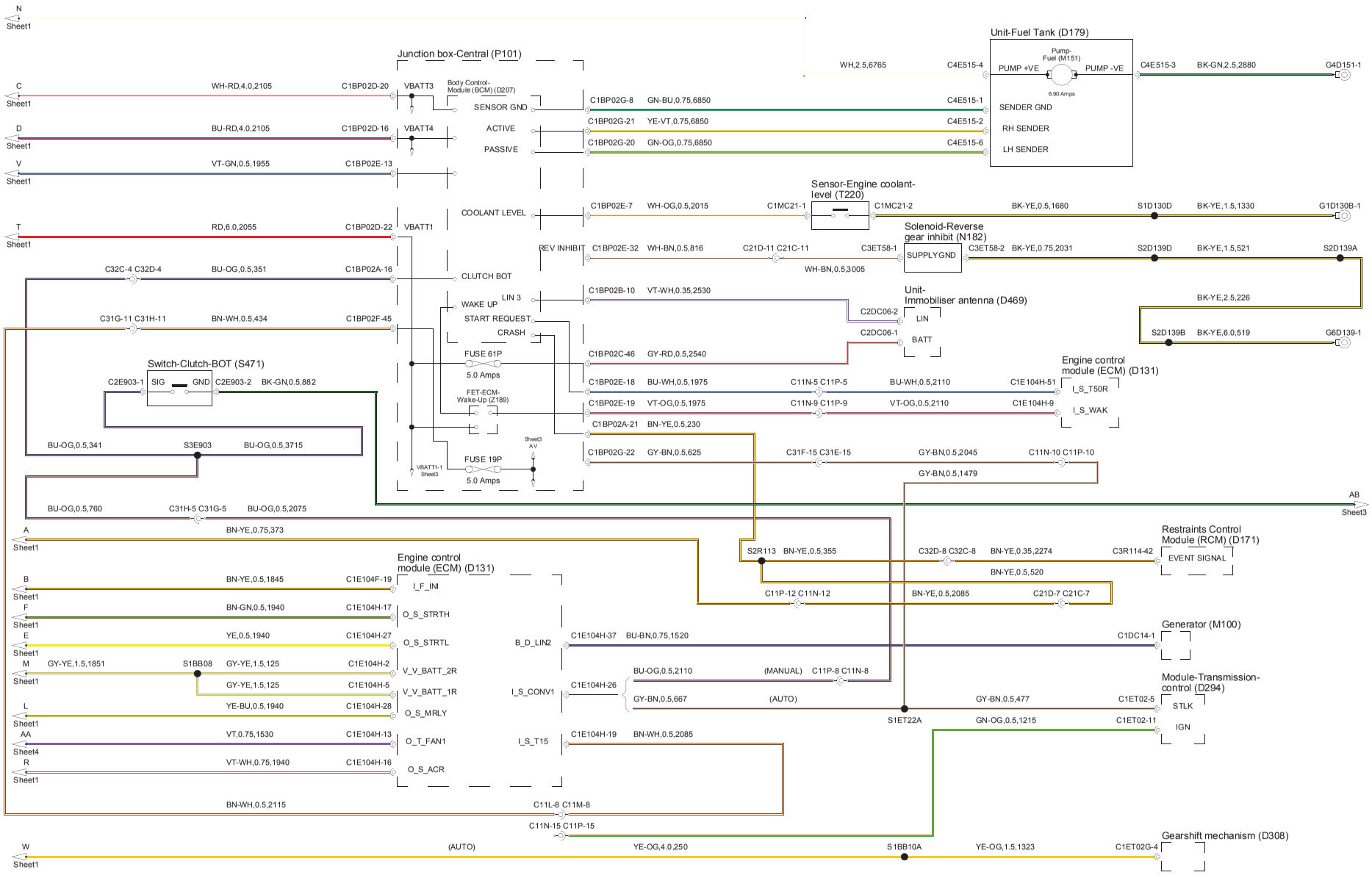
Junction box-Central (P101)
Unit-Fuel Tank (D179)
Pump-Fuel (M151)
PUMP +VE
PUMP -VE
6.90 Amps
SENDER GND
RH SENDER
LH SENDER
Body Control-Module (BCM) (D207)
SENSOR GND
ACTIVE
PASSIVE
VBATT3
VBATT4
VBATT1
COOLANT LEVEL
CLUTCH BOT
LIN 3
WAKE UP
START REQUEST
CRASH
FUSE 61P
5.0 Amps
FET-ECM-Wake-Up (Z189)
FUSE 19P
5.0 Amps
Sensor-Engine coolant-level (T220)
Solenoid-Reverse gear inhibit (N182)
SUPPLYGND
REV INHIBIT
Unit-Immobiliser antenna (D469)
LIN
BATT
Switch-Clutch-BOT (S471)
SIG
GND
Engine control module (ECM) (D131)
I_S_T50R
I_S_WAK
Restraints Control Module (RCM) (D171)
EVENT SIGNAL
Generator (M100)
Module-Transmission-control (D294)
STLK
IGN
Gearshift mechanism (D308)
I_F_INI
O_S_STRTH
O_S_STRTL
V_V_BATT_2R
V_V_BATT_1R
O_S_MRLY
O_T_FAN1
O_S_ACR
B_D_LIN2
I_S_CONV1
I_S_T15
(MANUAL)
(AUTO)
Sheet1
Sheet3
Sheet4

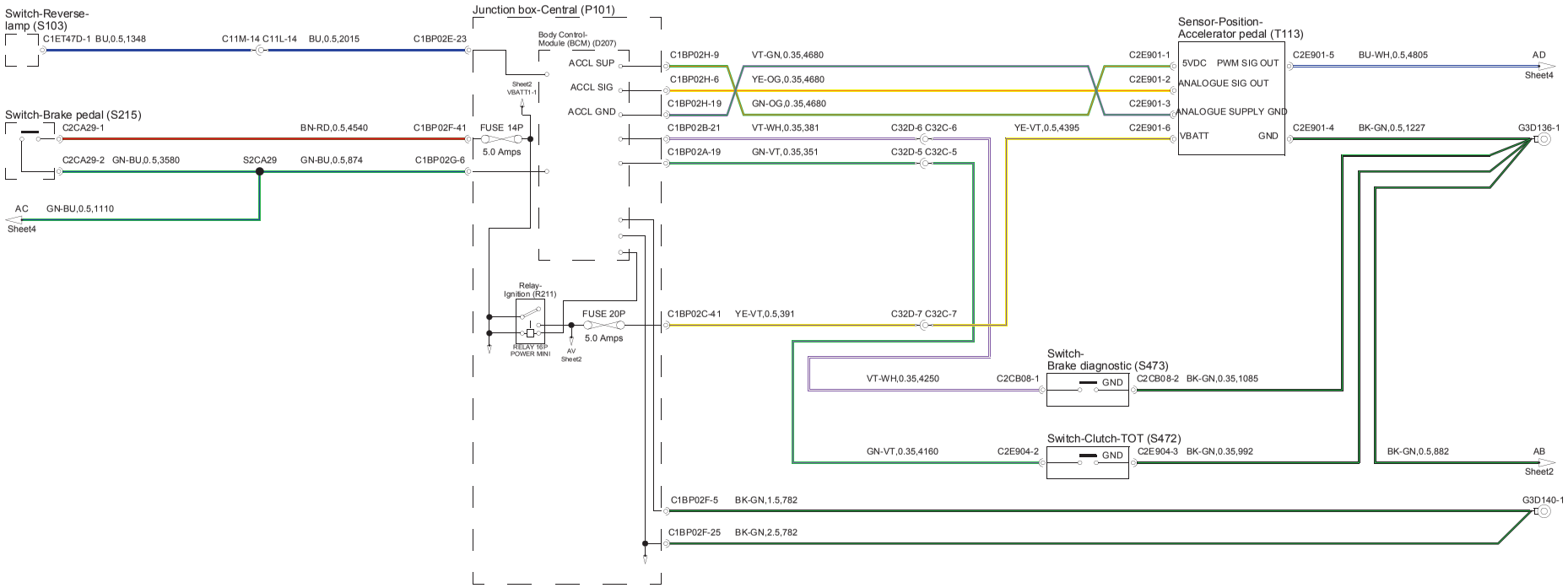
Switch-Reverse-lamp (S103)
C1ET47D-1 BU,0.5,1348
C11M-14 C11L-14 BU,0.5,2015
C1BP02E-23
Junction box-Central (P101)
Body Control-Module (BCM) (D207)
ACCL SUP
ACCL SIG
ACCL GND
Sheet2 VBATT1-1
Switch-Brake pedal (S215)
C2CA29-1
BN-RD,0.5,4540
C1BP02F-41
FUSE 14P
5.0 Amps
C2CA29-2 GN-BU,0.5,3580
S2CA29
GN-BU,0.5,874
C1BP02G-6
AC GN-BU,0.5,1110
Sheet4
Relay-Ignition (R211)
RELAY 16P POWER MINI
FUSE 20P
5.0 Amps
AV Sheet2
C1BP02H-9 VT-GN,0.35,4680
C1BP02H-6 YE-OG,0.35,4680
C1BP02H-19 GN-OG,0.35,4680
C1BP02B-21 VT-WH,0.35,381
C32D-6 C32C-6
YE-VT,0.5,4395
C1BP02A-19 GN-VT,0.35,351
C32D-5 C32C-5
C1BP02C-41 YE-VT,0.5,391
C32D-7 C32C-7
Sensor-Position-Accelerator pedal (T113)
C2E901-1
C2E901-2
C2E901-3
C2E901-6
5VDC PWM SIG OUT
ANALOGUE SIG OUT
ANALOGUE SUPPLY GND
VBATT GND
C2E901-5 BU-WH,0.5,4805
AD
Sheet4
C2E901-4 BK-GN,0.5,1227
G3D136-1
Switch-Brake diagnostic (S473)
VT-WH,0.35,4250
C2CB08-1
GND
C2CB08-2 BK-GN,0.35,1085
Switch-Clutch-TOT (S472)
GN-VT,0.35,4160
C2E904-2
GND
C2E904-3 BK-GN,0.35,992
BK-GN,0.5,882
AB
Sheet2
C1BP02F-5 BK-GN,1.5,782
G3D140-1
C1BP02F-25 BK-GN,2.5,782

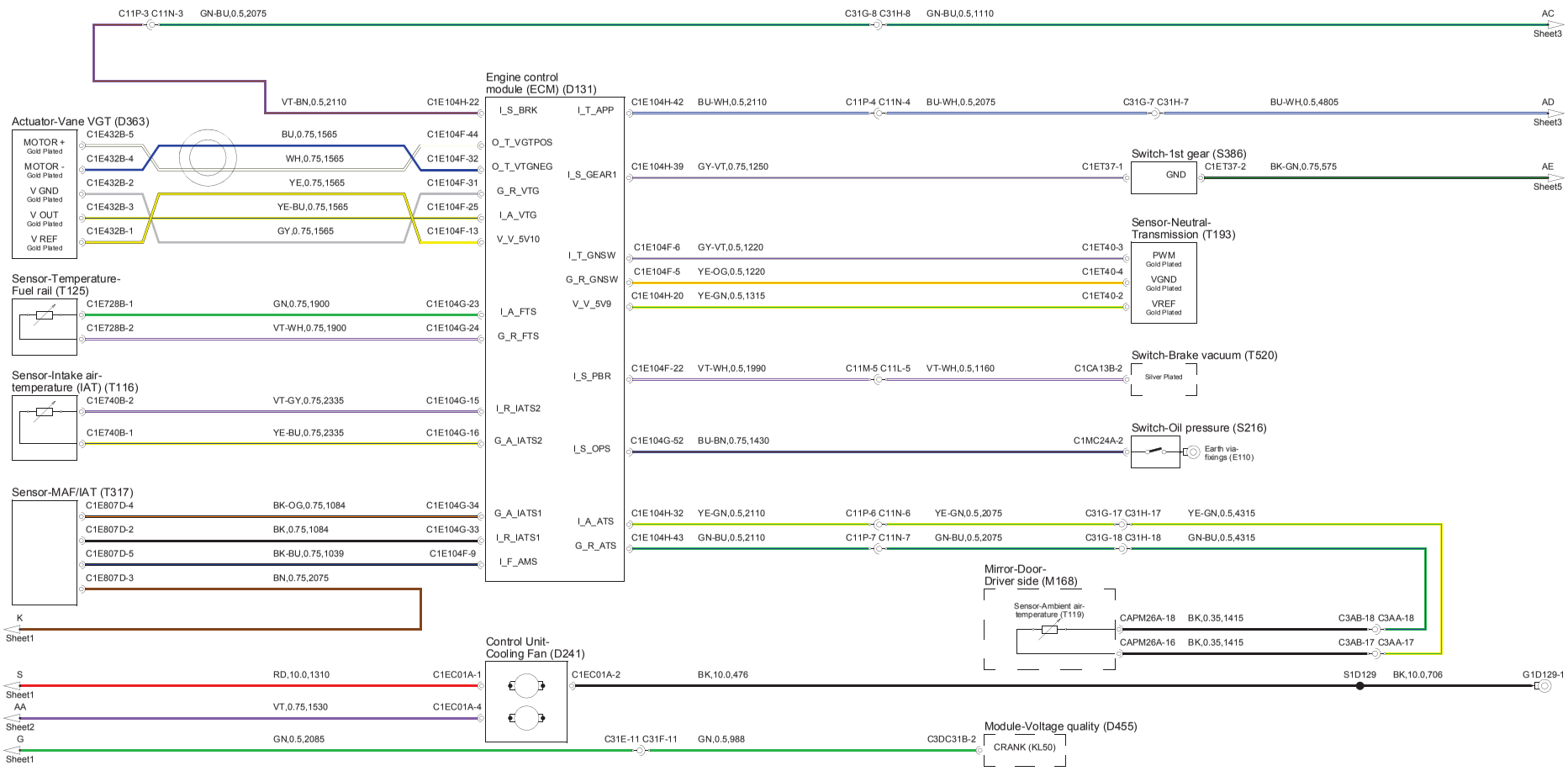
C11P-3 C11N-3 GN-BU,0.5,2075
C31G-8 C31H-8 GN-BU,0.5,1110
AC
Sheet3
Engine control module (ECM) (D131)
VT-BN,0.5,2110
C1E104H-22
I_S_BRK
I_T_APP
C1E104H-42 BU-WH,0.5,2110
C11P-4 C11N-4 BU-WH,0.5,2075
C31G-7 C31H-7 BU-WH,0.5,4805
AD
Sheet3
Actuator-Vane VGT (D363)
MOTOR + Gold Plated
MOTOR - Gold Plated
V GND Gold Plated
V OUT Gold Plated
V REF Gold Plated
C1E432B-5 BU,0.75,1565 C1E104F-44
O_T_VGTPOS
C1E432B-4 WH,0.75,1565 C1E104F-32
O_T_VTGNEG
C1E432B-2 YE,0.75,1565 C1E104F-31
G_R_VTG
C1E432B-3 YE-BU,0.75,1565 C1E104F-25
I_A_VTG
C1E432B-1 GY,0.75,1565 C1E104F-13
V_V_5V10
I_S_GEAR1
C1E104H-39 GY-VT,0.75,1250
C1ET37-1
Switch-1st gear (S386)
GND
C1ET37-2 BK-GN,0.75,575
AE
Sheet5
Sensor-Neutral-Transmission (T193)
PWM Gold Plated
VGND Gold Plated
VREF Gold Plated
I_T_GNSW
C1E104F-6 GY-VT,0.5,1220
C1ET40-3
G_R_GNSW
C1E104F-5 YE-OG,0.5,1220
C1ET40-4
V_V_5V9
C1E104H-20 YE-GN,0.5,1315
C1ET40-2
Sensor-Temperature-Fuel rail (T125)
C1E728B-1 GN,0.75,1900 C1E104G-23
I_A_FTS
C1E728B-2 VT-WH,0.75,1900 C1E104G-24
G_R_FTS
I_S_PBR
C1E104F-22 VT-WH,0.5,1990
C11M-5 C11L-5 VT-WH,0.5,1160
C1CA13B-2
Switch-Brake vacuum (T520)
Silver Plated
Sensor-Intake air-temperature (IAT) (T116)
C1E740B-2 VT-GY,0.75,2335 C1E104G-15
I_R_IATS2
C1E740B-1 YE-BU,0.75,2335 C1E104G-16
G_A_IATS2
I_S_OPS
C1E104G-52 BU-BN,0.75,1430
C1MC24A-2
Switch-Oil pressure (S216)
Earth via-fixings (E110)
Sensor-MAF/IAT (T317)
C1E807D-4 BK-OG,0.75,1084 C1E104G-34
G_A_IATS1
I_A_ATS
C1E104H-32 YE-GN,0.5,2110
C11P-6 C11N-6 YE-GN,0.5,2075
C31G-17 C31H-17 YE-GN,0.5,4315
C1E807D-2 BK,0.75,1084 C1E104G-33
I_R_IATS1
G_R_ATS
C1E104H-43 GN-BU,0.5,2110
C11P-7 C11N-7 GN-BU,0.5,2075
C31G-18 C31H-18 GN-BU,0.5,4315
C1E807D-5 BK-BU,0.75,1039 C1E104F-9
I_F_AMS
C1E807D-3 BN,0.75,2075
Mirror-Door-Driver side (M168)
Sensor-Ambient air-temperature (T119)
CAPM26A-18 BK,0.35,1415 C3AB-18 C3AA-18
CAPM26A-16 BK,0.35,1415 C3AB-17 C3AA-17
K
Sheet1
Control Unit-Cooling Fan (D241)
S
Sheet1
RD,10.0,1310 C1EC01A-1
C1EC01A-2 BK,10.0,476
S1D129 BK,10.0,706 G1D129-1
AA
Sheet2
VT,0.75,1530 C1EC01A-4
G
Sheet1
GN,0.5,2085
C31E-11 C31F-11 GN,0.5,988
C3DC31B-2
Module-Voltage quality (D455)
CRANK (KL50)

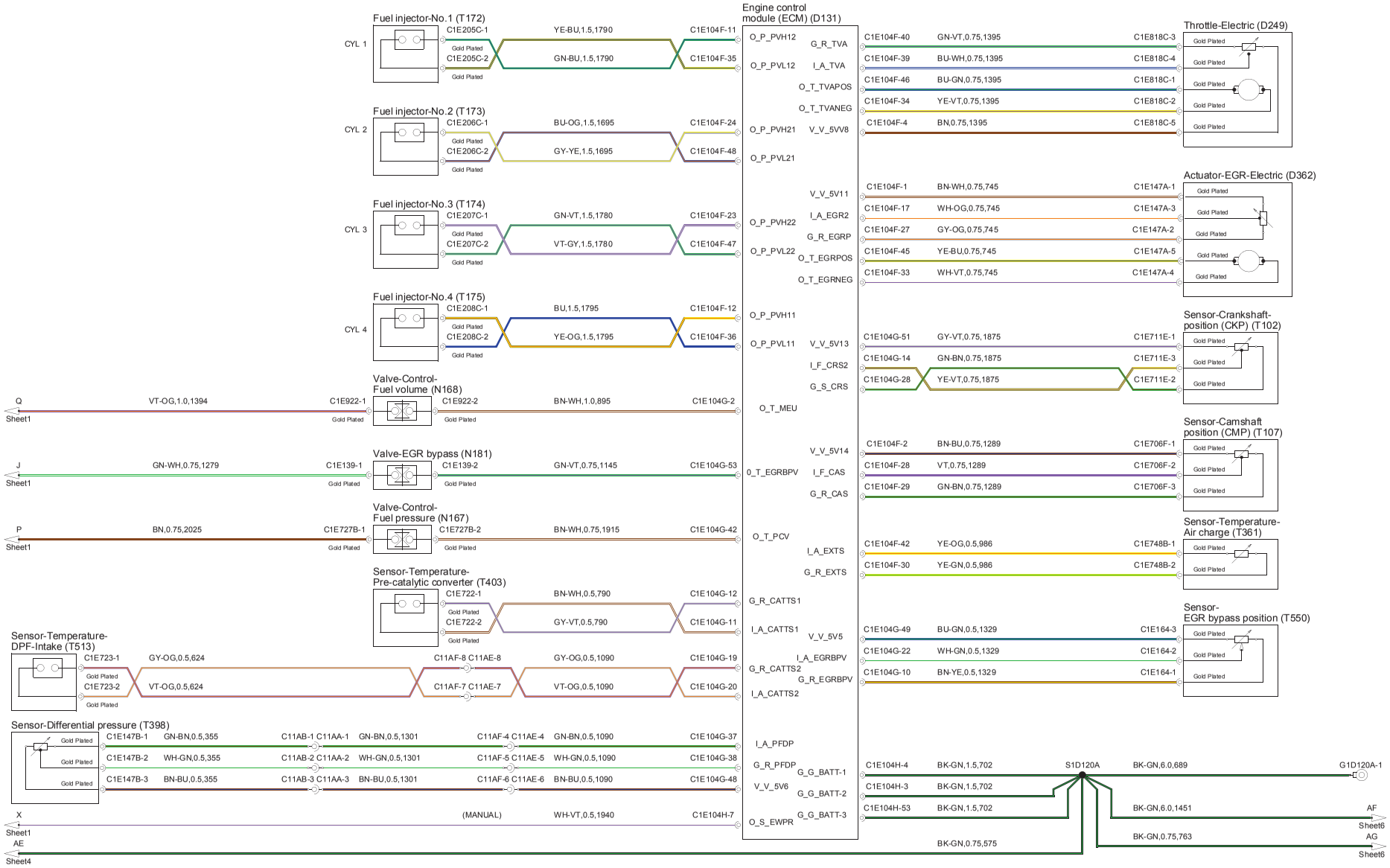
Engine control module (ECM) (D131)
Fuel injector-No.1 (T172)
CYL 1
C1E205C-1
C1E205C-2
YE-BU,1.5,1790
GN-BU,1.5,1790
C1E104F-11
C1E104F-35
Fuel injector-No.2 (T173)
CYL 2
C1E206C-1
C1E206C-2
BU-OG,1.5,1695
GY-YE,1.5,1695
C1E104F-24
C1E104F-48
Fuel injector-No.3 (T174)
CYL 3
C1E207C-1
C1E207C-2
GN-VT,1.5,1780
VT-GY,1.5,1780
C1E104F-23
C1E104F-47
Fuel injector-No.4 (T175)
CYL 4
C1E208C-1
C1E208C-2
BU,1.5,1795
YE-OG,1.5,1795
C1E104F-12
C1E104F-36
Gold Plated
Valve-Control-Fuel volume (N168)
Q
Sheet1
VT-OG,1.0,1394
C1E922-1
C1E922-2
BN-WH,1.0,895
C1E104G-2
Valve-EGR bypass (N181)
J
Sheet1
GN-WH,0.75,1279
C1E139-1
C1E139-2
GN-VT,0.75,1145
C1E104G-53
Valve-Control-Fuel pressure (N167)
P
Sheet1
BN,0.75,2025
C1E727B-1
C1E727B-2
BN-WH,0.75,1915
C1E104G-42
Sensor-Temperature-Pre-catalytic converter (T403)
C1E722-1
C1E722-2
BN-WH,0.5,790
GY-VT,0.5,790
C1E104G-12
C1E104G-11
Sensor-Temperature-DPF-Intake (T513)
C1E723-1
C1E723-2
GY-OG,0.5,624
VT-OG,0.5,624
C11AF-8 C11AE-8
C11AF-7 C11AE-7
GY-OG,0.5,1090
VT-OG,0.5,1090
C1E104G-19
C1E104G-20
Sensor-Differential pressure (T398)
C1E147B-1
C1E147B-2
C1E147B-3
GN-BN,0.5,355
WH-GN,0.5,355
BN-BU,0.5,355
C11AB-1 C11AA-1
C11AB-2 C11AA-2
C11AB-3 C11AA-3
GN-BN,0.5,1301
WH-GN,0.5,1301
BN-BU,0.5,1301
C11AF-4 C11AE-4
C11AF-5 C11AE-5
C11AF-6 C11AE-6
GN-BN,0.5,1090
WH-GN,0.5,1090
BN-BU,0.5,1090
C1E104G-37
C1E104G-38
C1E104G-48
X
Sheet1
(MANUAL)
WH-VT,0.5,1940
C1E104H-7
AE
Sheet4
O_P_PVH12
O_P_PVL12
O_P_PVH21
O_P_PVL21
O_P_PVH22
O_P_PVL22
O_P_PVH11
O_P_PVL11
O_T_MEU
0_T_EGRBPV
O_T_PCV
G_R_CATTS1
I_A_CATTS1
G_R_CATTS2
I_A_CATTS2
I_A_PFDP
G_R_PFDP
V_V_5V6
O_S_EWPR
G_R_TVA
I_A_TVA
O_T_TVAPOS
O_T_TVANEG
V_V_5VV8
V_V_5V11
I_A_EGR2
G_R_EGRP
O_T_EGRPOS
O_T_EGRNEG
V_V_5V13
I_F_CRS2
G_S_CRS
V_V_5V14
I_F_CAS
G_R_CAS
I_A_EXTS
G_R_EXTS
V_V_5V5
I_A_EGRBPV
G_R_EGRBPV
G_G_BATT-1
G_G_BATT-2
G_G_BATT-3
C1E104F-40 GN-VT,0.75,1395 C1E818C-3
C1E104F-39 BU-WH,0.75,1395 C1E818C-4
C1E104F-46 BU-GN,0.75,1395 C1E818C-1
C1E104F-34 YE-VT,0.75,1395 C1E818C-2
C1E104F-4 BN,0.75,1395 C1E818C-5
Throttle-Electric (D249)
C1E104F-1 BN-WH,0.75,745 C1E147A-1
C1E104F-17 WH-OG,0.75,745 C1E147A-3
C1E104F-27 GY-OG,0.75,745 C1E147A-2
C1E104F-45 YE-BU,0.75,745 C1E147A-5
C1E104F-33 WH-VT,0.75,745 C1E147A-4
Actuator-EGR-Electric (D362)
C1E104G-51 GY-VT,0.75,1875 C1E711E-1
C1E104G-14 GN-BN,0.75,1875 C1E711E-3
C1E104G-28 YE-VT,0.75,1875 C1E711E-2
Sensor-Crankshaft-position (CKP) (T102)
C1E104F-2 BN-BU,0.75,1289 C1E706F-1
C1E104F-28 VT,0.75,1289 C1E706F-2
C1E104F-29 GN-BN,0.75,1289 C1E706F-3
Sensor-Camshaft position (CMP) (T107)
C1E104F-42 YE-OG,0.5,986 C1E748B-1
C1E104F-30 YE-GN,0.5,986 C1E748B-2
Sensor-Temperature-Air charge (T361)
C1E104G-49 BU-GN,0.5,1329 C1E164-3
C1E104G-22 WH-GN,0.5,1329 C1E164-2
C1E104G-10 BN-YE,0.5,1329 C1E164-1
Sensor-EGR bypass position (T550)
C1E104H-4 BK-GN,1.5,702
C1E104H-3 BK-GN,1.5,702
C1E104H-53 BK-GN,1.5,702
S1D120A
BK-GN,6.0,689
G1D120A-1
BK-GN,6.0,1451
AF
Sheet6
BK-GN,0.75,763
AG
Sheet6
BK-GN,0.75,575

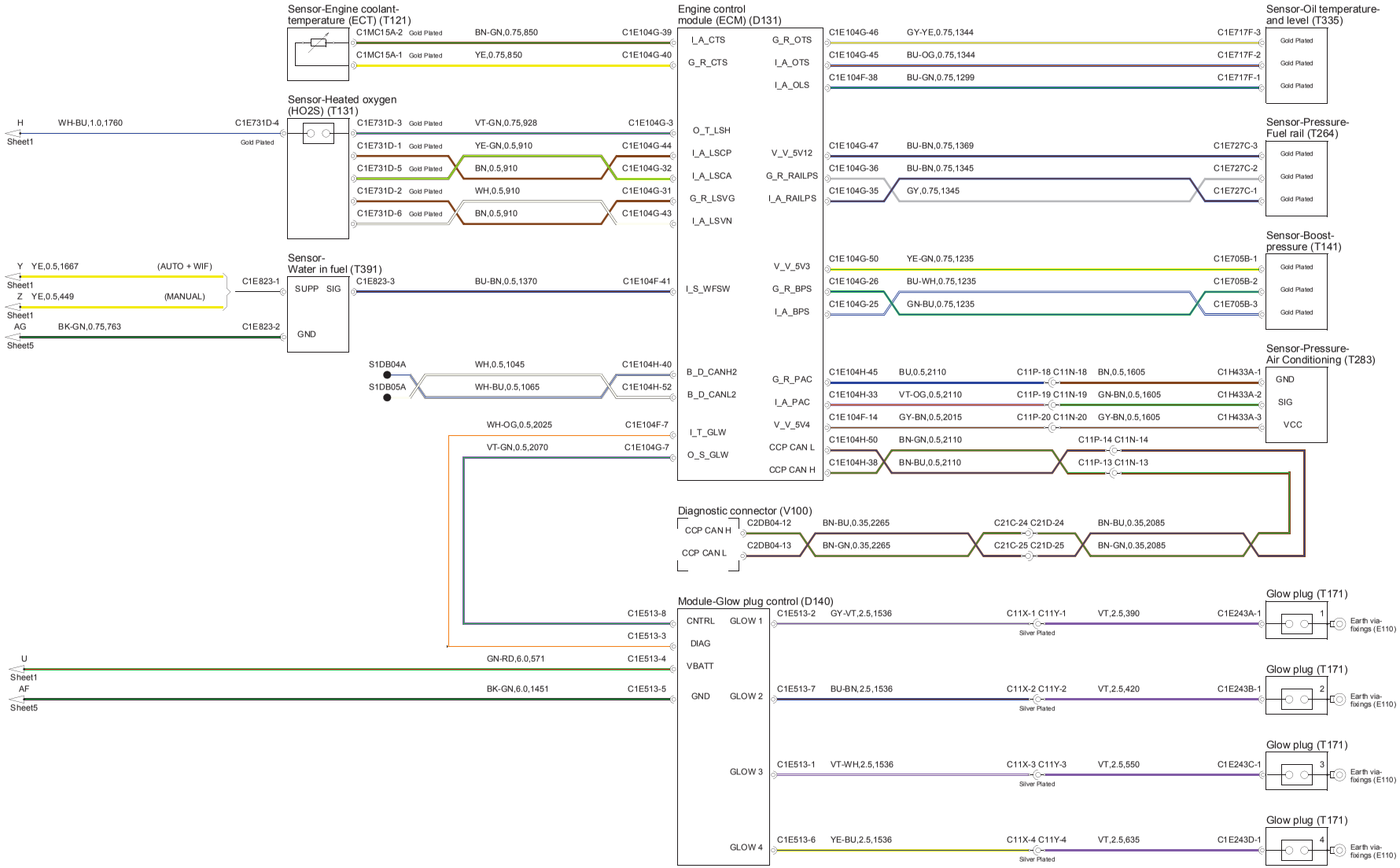
Sensor-Engine coolant-temperature (ECT) (T121)
C1MC15A-2 Gold Plated BN-GN,0.75,850 C1E104G-39
C1MC15A-1 Gold Plated YE,0.75,850 C1E104G-40
Engine control module (ECM) (D131)
I_A_CTS
G_R_CTS
G_R_OTS
I_A_OTS
I_A_OLS
C1E104G-46 GY-YE,0.75,1344 C1E717F-3
C1E104G-45 BU-OG,0.75,1344 C1E717F-2
C1E104F-38 BU-GN,0.75,1299 C1E717F-1
Sensor-Oil temperature-and level (T335)
Gold Plated
Sensor-Heated oxygen (HO2S) (T131)
H WH-BU,1.0,1760 C1E731D-4
Sheet1
Gold Plated
C1E731D-3 Gold Plated VT-GN,0.75,928 C1E104G-3
C1E731D-1 Gold Plated YE-GN,0.5,910 C1E104G-44
C1E731D-5 Gold Plated BN,0.5,910 C1E104G-32
C1E731D-2 Gold Plated WH,0.5,910 C1E104G-31
C1E731D-6 Gold Plated BN,0.5,910 C1E104G-43
O_T_LSH
I_A_LSCP
I_A_LSCA
G_R_LSVG
I_A_LSVN
V_V_5V12
G_R_RAILPS
I_A_RAILPS
C1E104G-47 BU-BN,0.75,1369 C1E727C-3
C1E104G-36 BU-BN,0.75,1345 C1E727C-2
C1E104G-35 GY,0.75,1345 C1E727C-1
Sensor-Pressure-Fuel rail (T264)
Sensor-Water in fuel (T391)
Y YE,0.5,1667 (AUTO + WIF)
Sheet1
Z YE,0.5,449 (MANUAL)
Sheet1
AG BK-GN,0.75,763 C1E823-2
Sheet5
C1E823-1
SUPP SIG
GND
C1E823-3 BU-BN,0.5,1370 C1E104F-41
I_S_WFSW
V_V_5V3
G_R_BPS
I_A_BPS
C1E104G-50 YE-GN,0.75,1235 C1E705B-1
C1E104G-26 BU-WH,0.75,1235 C1E705B-2
C1E104G-25 GN-BU,0.75,1235 C1E705B-3
Sensor-Boost-pressure (T141)
S1DB04A WH,0.5,1045 C1E104H-40
S1DB05A WH-BU,0.5,1065 C1E104H-52
B_D_CANH2
B_D_CANL2
G_R_PAC
I_A_PAC
C1E104H-45 BU,0.5,2110 C11P-18 C11N-18 BN,0.5,1605 C1H433A-1
C1E104H-33 VT-OG,0.5,2110 C11P-19 C11N-19 GN-BN,0.5,1605 C1H433A-2
C1E104F-14 GY-BN,0.5,2015 C11P-20 C11N-20 GY-BN,0.5,1605 C1H433A-3
Sensor-Pressure-Air Conditioning (T283)
GND
SIG
VCC
WH-OG,0.5,2025 C1E104F-7
VT-GN,0.5,2070 C1E104G-7
I_T_GLW
O_S_GLW
V_V_5V4
CCP CAN L
CCP CAN H
C1E104H-50 BN-GN,0.5,2110 C11P-14 C11N-14
C1E104H-38 BN-BU,0.5,2110 C11P-13 C11N-13
Diagnostic connector (V100)
CCP CAN H
CCP CAN L
C2DB04-12 BN-BU,0.35,2265 C21C-24 C21D-24 BN-BU,0.35,2085
C2DB04-13 BN-GN,0.35,2265 C21C-25 C21D-25 BN-GN,0.35,2085
Module-Glow plug control (D140)
C1E513-8
C1E513-3
U GN-RD,6.0,571 C1E513-4
Sheet1
AF BK-GN,6.0,1451 C1E513-5
Sheet5
CNTRL
DIAG
VBATT
GND
GLOW 1
GLOW 2
GLOW 3
GLOW 4
C1E513-2 GY-VT,2.5,1536 C11X-1 C11Y-1 VT,2.5,390 C1E243A-1
C1E513-7 BU-BN,2.5,1536 C11X-2 C11Y-2 VT,2.5,420 C1E243B-1
C1E513-1 VT-WH,2.5,1536 C11X-3 C11Y-3 VT,2.5,550 C1E243C-1
C1E513-6 YE-BU,2.5,1536 C11X-4 C11Y-4 VT,2.5,635 C1E243D-1
Silver Plated
Glow plug (T171)
Earth via-fixings (E110)